THIRD ANGLE PROJECTION

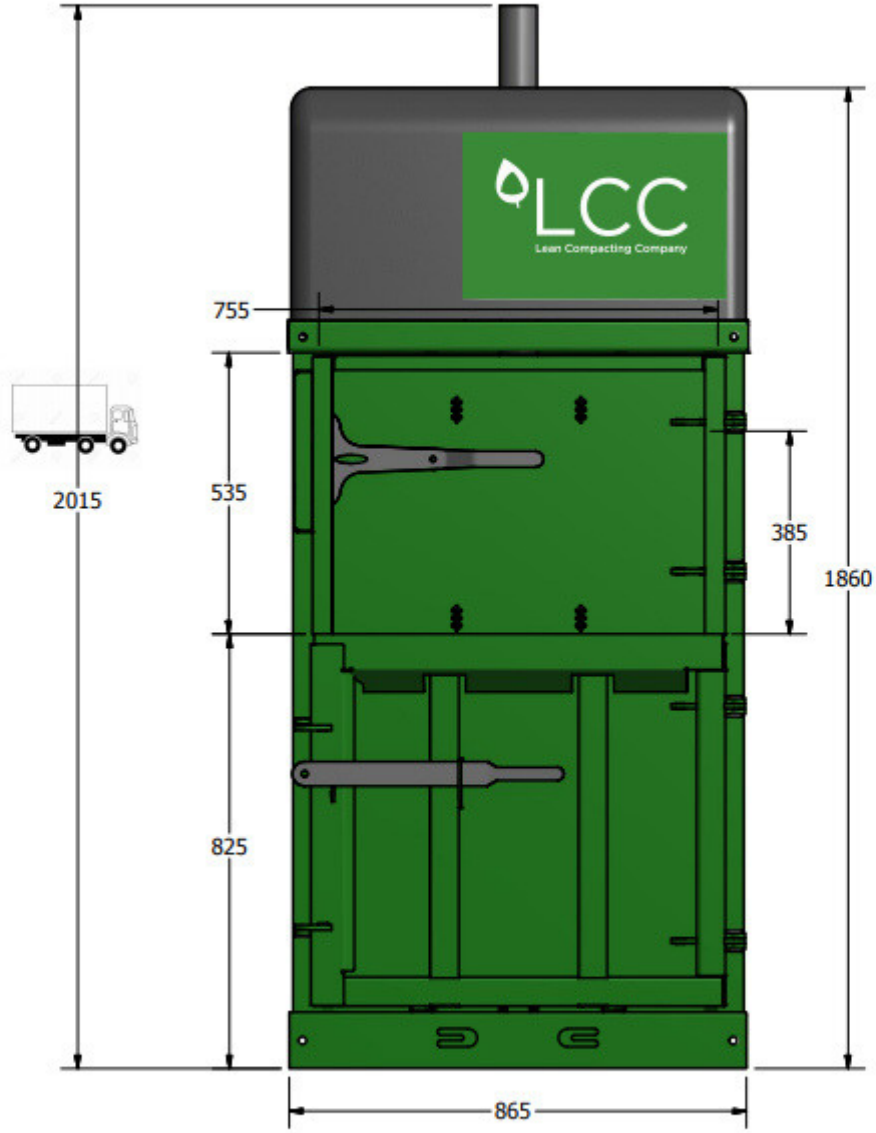

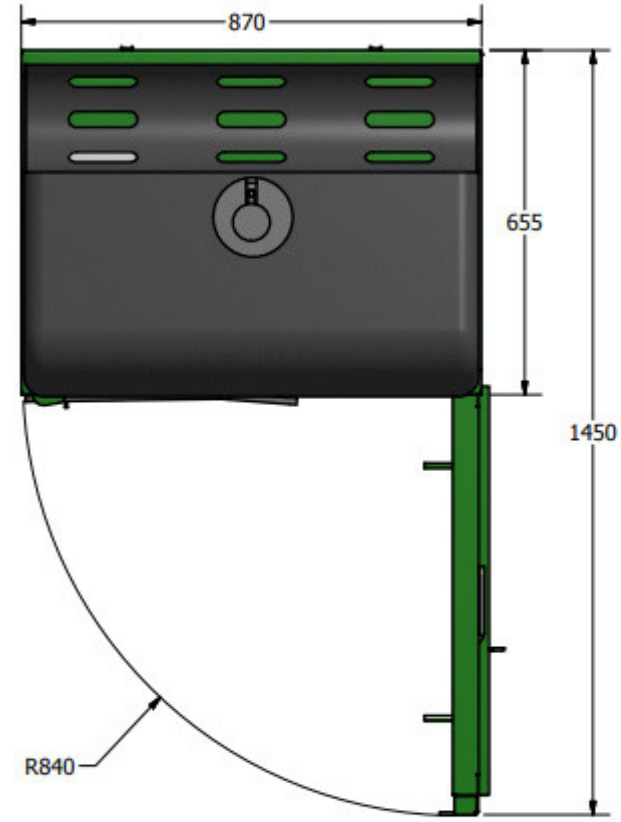

lcc.eco	
MODEL CODE	V5
MACHINE WEIGHT	340 KG
NOISE LEVEL	70 dB